

Technical drawing **W-55**

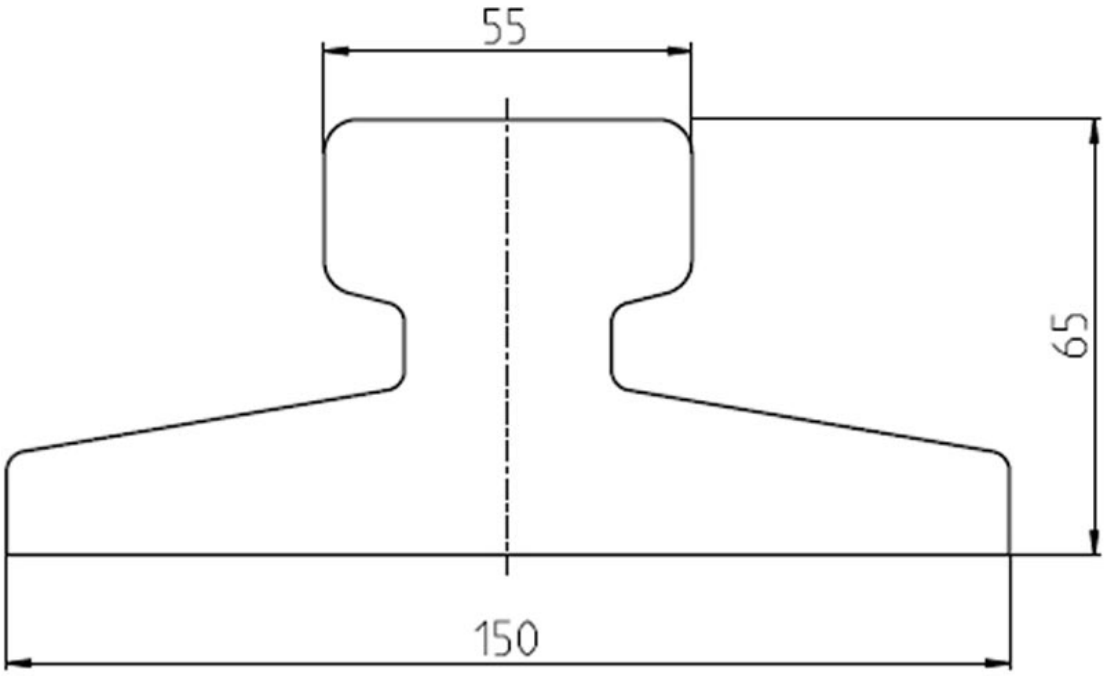

copyright © 2026 by WINKEL GmbH | 75428 Illingen | Am Illinger Eck 7
Telefon: +49 7042-8250-0 | Fax: +49 7042-23 888 | komponentenanfrage@winkel.de



copyright © 2026 by WINKEL GmbH | 75428 Illingen | Am Illinger Eck 7
Telefon: +49 7042-8250-0 | Fax: +49 7042-23 888 | komponentenanfrage@winkel.de