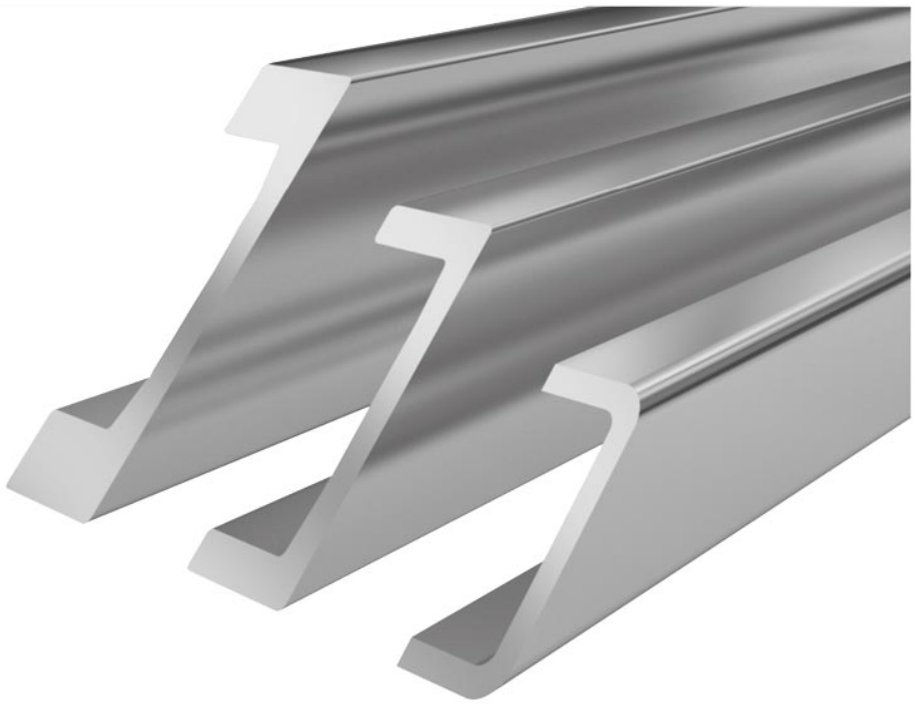

Material properties Standard U-profile **Standard 2 NbV**

- Hot rolled profile in sandblasted version.
- Profile is made from high-quality steel S450 J2 mod.
- Higher load capacity with new NbV-series
- Production-related straightness ± 1,0 mm/meter.
- This profile is availiable as fine straightened style on request (± 0,3 mm per meter)
- L_{max} = Maximum production length 12m

Technical drawing **Standard 2 NbV**

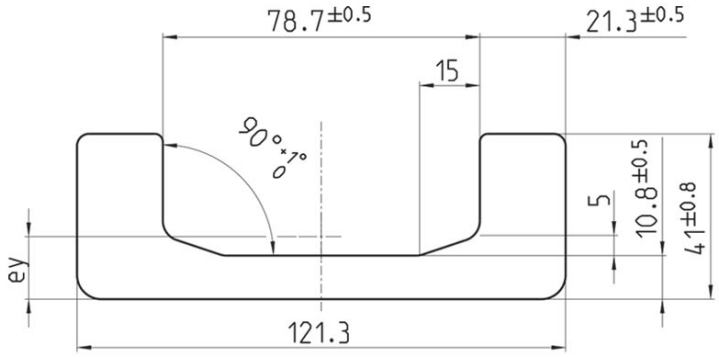

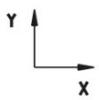

*The straightness for **fine straightness profiles is ± 0,3 mm per meter**, Standard profiles ± 1,0 mm per meter.

copyright © 2026 by WINKEL GmbH | 75428 Illingen | Am Illinger Eck 7
Telefon: +49 7042-8250-0 | Fax: +49 7042-23 888 | komponentenanfrage@winkel.de



Resistance Moments **Standard 2 NbV**

Article number	m kg/m	A cm²	Ix cm⁴	Wx cm³	Iy cm⁴	Wy cm³	ey cm	L_{max} in m
113.012.000	20.9	26.60	37.80	14.80	489.70	80.70	1.60	12

m = mass, **A** = surface, **Ix** = surface moment, **Wx** = resistance moment, **Iy** = surface moment, **Wy** = resistance moment , **ey** = distance measure of the y-angle , L_{max} = Maximum production length

WINKEL U-Profiles with 30% increased load capacity

- higher load capacity at same sizes by using profiles with steelgrade S450 J2 mod.
- choice of smaller sizes (price advantage)
- higher resistance against wear out effects

Comparison S355 J2 - S450 J2 mod.

Characteristic	S355 J2	S450 J2 mod.
Yield point 1	min 355 MPa [N/mm²]	min 430 MPa [N/mm²]
Yield point 2	min 345 MPa [N/mm²]	min 420 MPa [N/mm²]
Tensile strength	470 - 630 MPa [N/mm²]	550 - 700 MPa [N/mm²]
max. hertzian pressure	750 MPa [N/mm²]	900 MPa [N/mm²]

Notice: Yield point 1 is only valid for flange thickness < 20 mm, yield point 2 is only valid for flange thickness > 20 mm.

Because of micro alloying with Vanadium and/or Niobium the steel grade S450J2 mod. has a significantly higher tensile and yield strength and a more fine-grained structure than the customary steel grade S355 J2. In consequence of this and due to a stronger limitation of the elements P and S the steel shows a higher resistance to brittle fracture. Related to this is an increased bearing pressure which is shown by the diagram below.

Load capacity of radial bearings in comparison:



copyright © 2026 by WINKEL GmbH | 75428 Illingen | Am Illinger Eck 7
Telefon: +49 7042-8250-0 | Fax: +49 7042-23 888 | komponentenanfrage@winkel.de

Instructional Video

Fine straightening to U profiles



copyright © 2026 by WINKEL GmbH | 75428 Illingen | Am Illinger Eck 7
Telefon: +49 7042-8250-0 | Fax: +49 7042-23 888 | komponentenanfrage@winkel.de

Matching Clampflange: **KF 2**

Article No. 290.005.000

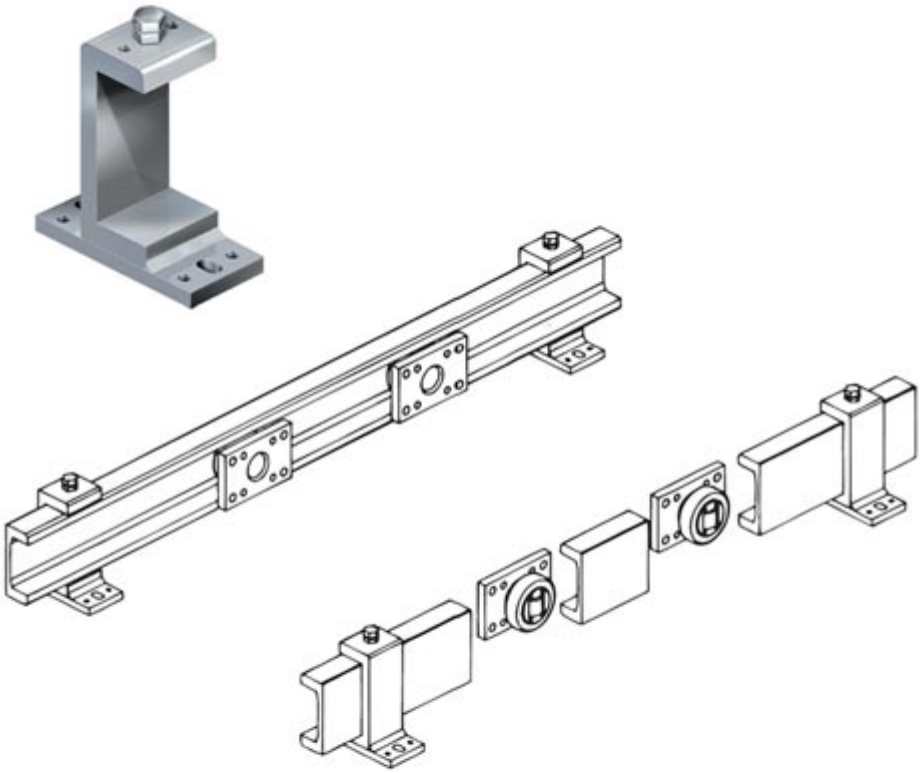

Technical dimensions **Clamp flange KF 2**

H	B	L	S	J	e	g	t	a1	b1	d1	d2	d3	e1	M	Weight [kg]
157,2	80	160	15	123,0	49,4	61,2	14,0	130	60	6	13	18	30,6	M 12x35	3,85

H = Height clamp profile, **B** = Width clamp flange, **L** = Lenght clamp flange, **S** = mounting flange strength, **g** = Width clamp profile, **t** = Strenght clamp profile, **a1** = Distance pin hole, **b1** = Distance pin hole, **d1** = Diameter pin hole, **d2** = Width slotted hole, **d3** = Length slotted hole, **e1** = Distance pin hole, **M** = Thread

copyright © 2026 by WINKEL GmbH | 75428 Illingen | Am Illinger Eck 7
Telefon: +49 7042-8250-0 | Fax: +49 7042-23 888 | komponentenanfrage@winkel.de