

## Material properties Type PG 6 NbV

- Profile is made from high-quality steel S450 J2 mod.
- Profile sandblasted and fine straightened ± 0,3mm / rm
- Higher load capacity with new NbV-series
- $L_{max}$ = Maximum production length 12m

## Technical drawing **PG 6 NbV**

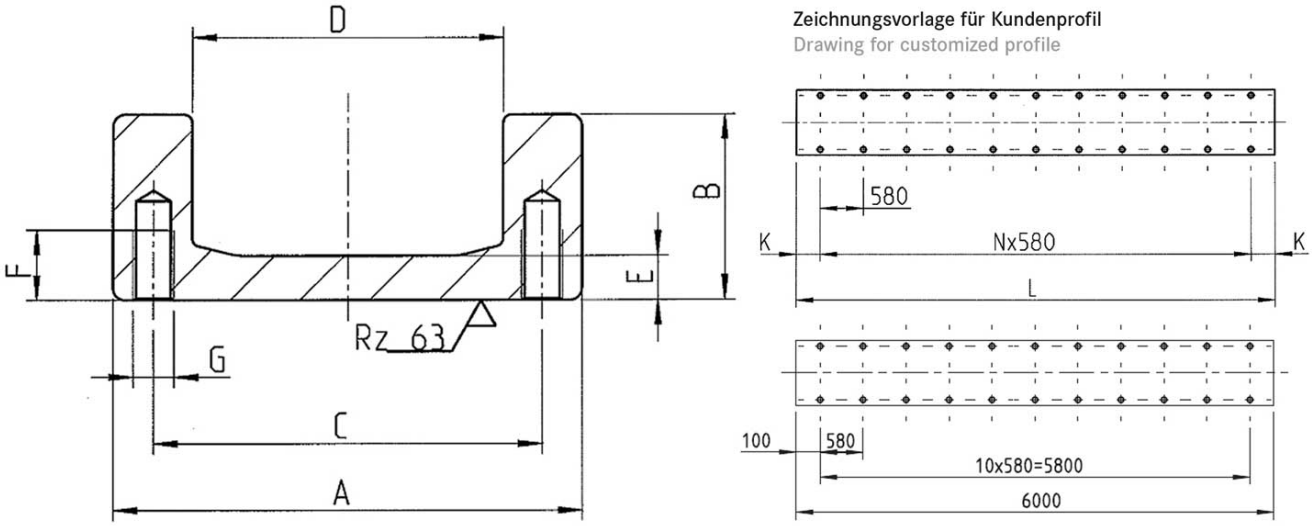


copyright © 2026 by WINKEL GmbH | 75428 Illingen | Am Illinger Eck 7
Telefon: +49 7042-8250-0 | Fax: +49 7042-23 888 | komponentenanfrage@winkel.de



## Dimensions **PG 6 NbV**

| A ± 1.5 [mm] | B ± 1.5 [mm] | C [mm] | D ± 0.5 [mm] | E [mm] | F [mm] | G | $L_{max}$ in m |
|---|---|---|---|---|---|---|---|
| 201.5 | 69.0 | 177.8 | 150.1 | 17.2 | 30.0 | M16 | 12 |

**A** = Total height ± tolerance, **B** = Total width ± tolerance, **C** = Width roller axial bearing, **D** = Sectional dimension roller ± tolerance, **E** = Bar width, **F** = Depth of threaded hole, **G** = Thread, $L_{max}$ = Maximum production length

## Resistance Moments **PG 6 NbV**

| Article number | m kg/m | A cm² | Ix cm⁴ | Wx cm³ | Iy cm⁴ | Wy cm³ | ey cm |
|---|---|---|---|---|---|---|---|
| 113.021.006 | 47.8 | 66.30 | 266.40 | 56.40 | 3.402.50 | 337.70 | 2.40 |

**m** = mass, **A** = surface, **Ix** = surface moment, **Wx** = resistance moment, **Iy** = surface moment, **Wy** = resistance moment , **ey** = distance measure of the y-angle

copyright © 2026 by WINKEL GmbH | 75428 Illingen | Am Illinger Eck 7
Telefon: +49 7042-8250-0 | Fax: +49 7042-23 888 | komponentenanfrage@winkel.de