

Material properties Type PG 5 NbV

- Profile is made from high-quality steel S450 J2 mod.
- Profile sandblasted and fine straightened ± 0,3mm / rm
- Higher load capacity with new NbV-series
- L_{max} = Maximum production length 12m

Technical drawing **PG 5 NbV**

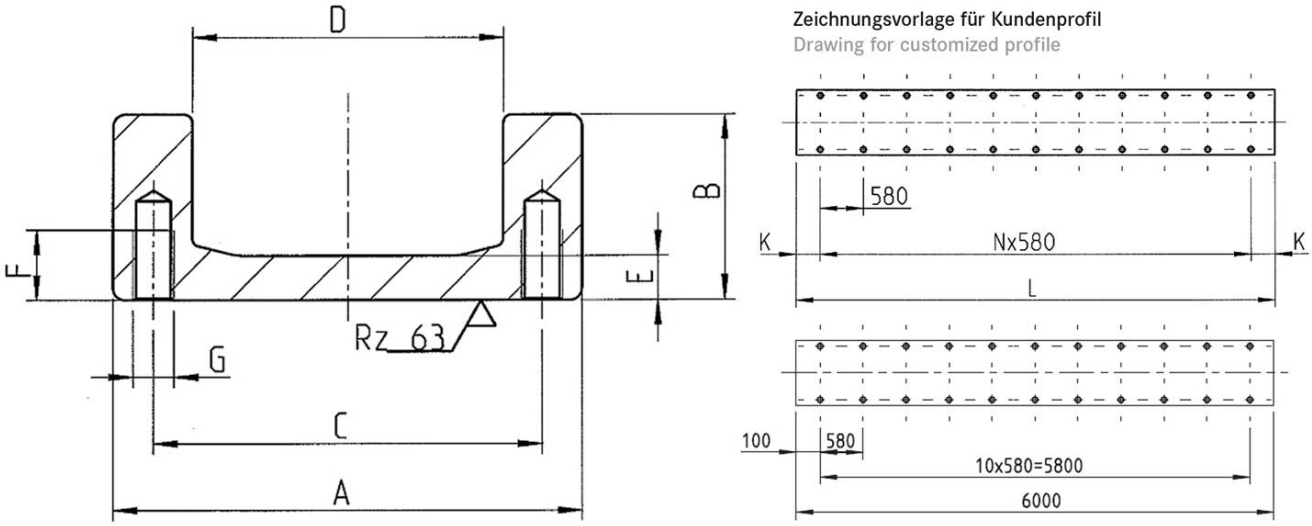

copyright © 2026 by WINKEL GmbH | 75428 Illingen | Am Illinger Eck 7
Telefon: +49 7042-8250-0 | Fax: +49 7042-23 888 | komponentenanfrage@winkel.de



Dimensions **PG 5 NbV**

A ± 1.75 [mm]	B ± 1.5 [mm]	C [mm]	D ± 0.5 [mm]	E [mm]	F [mm]	G	L_{max} in m
175.0	64.0	151.5	123.8	14.0	30.0	M16	12

A = Total height ± tolerance, **B** = Total width ± tolerance, **C** = Width roller axial bearing, **D** = Sectional dimension roller ± tolerance, **E** = Bar width, **F** = Depth of threaded hole, **G** = Thread, L_{max} = Maximum production length

Resistance Moments **PG 5 NbV**

Article number	m kg/m	A cm²	Ix cm⁴	Wx cm³	Iy cm⁴	Wy cm³	ey cm
113.021.005	39.1	54.40	203.10	47.70	2.167.70	247.70	2.40

m = mass, **A** = surface, **Ix** = surface moment, **Wx** = resistance moment, **Iy** = surface moment, **Wy** = resistance moment , **ey** = distance measure of the y-angle

copyright © 2026 by WINKEL GmbH | 75428 Illingen | Am Illinger Eck 7
Telefon: +49 7042-8250-0 | Fax: +49 7042-23 888 | komponentenanfrage@winkel.de