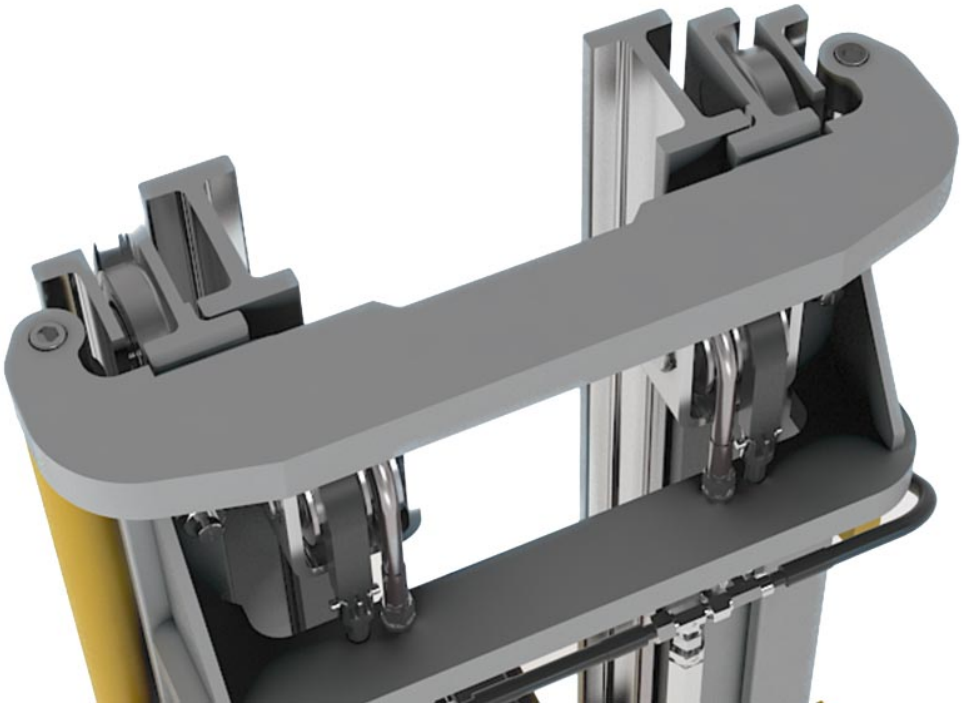

Material properties Type 3018 NbV

- All profiles are made from high-quality steel S450 J2 mod., L_{max} = 12m
- Profiles in mill finish version/not sandblasted
- Production-related straightness ± 1,0 mm/meter
- Higher load capacity with new NbV-series
- This profile is availiable as fine straightened style on request (± 0,3 mm per meter)

Technical drawing **3018 NbV**

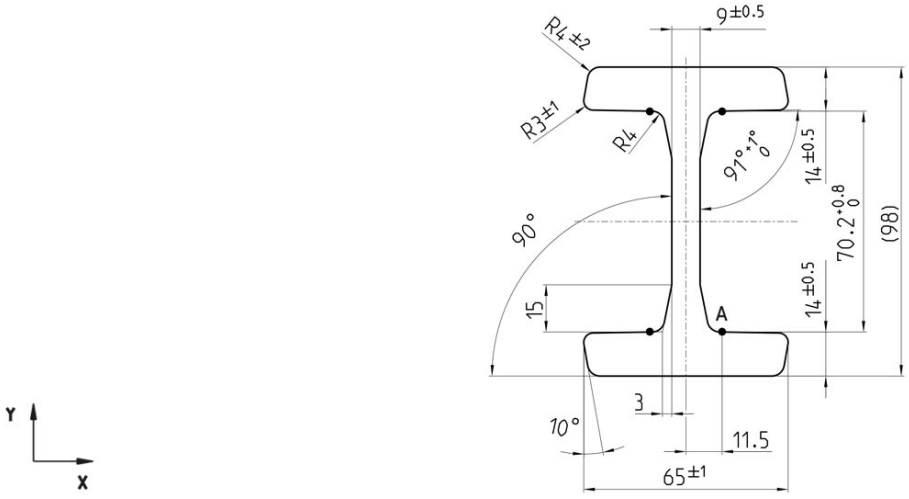

Measuring point A

copyright © 2026 by WINKEL GmbH | 75428 Illingen | Am Illinger Eck 7
Telefon: +49 7042-8250-0 | Fax: +49 7042-23 888 | komponentenanfrage@winkel.de



Resistance Moments **3018 NbV**

Article number	m kg/m	A cm²	Ix cm⁴	Wx cm³	Iy cm⁴	Wy cm³	L_{max} in m
112.001.000	19.4	24.80	346.10	70.60	58.30	18.00	12

m = mass, **A** = surface, **Ix** = surface moment, **Wx** = resistance moment, **Iy** = surface moment, **Wy** = resistance moment , L_{max} = Maximum production length

Instructional Video

Fine straightening to U profiles



copyright © 2026 by WINKEL GmbH | 75428 Illingen | Am Illinger Eck 7
Telefon: +49 7042-8250-0 | Fax: +49 7042-23 888 | komponentenanfrage@winkel.de